Galltec Mess- und Regeltechnik GmbH
D-71145 Bondorf · Germany
Tel. +49 (0)7457-9453-0 · Fax +49 (0)7457-3758
E-Mail: sensoren@galltec.de · Internet:www.galltec-mela.de

MELA Sensortechnik GmbH
D-07987 Mohlsdorf (Thüringen) · Germany
Tel. +49(0)3661-62704-0 · Fax +49(0)3661-62704-20
E-mail:mela@melasensor.de · Internet: www.galltec-mela.de

Humidity sensors for condensation control

- **analogue output signal** **Type FGO 2.K/5**
- **switching output (break contact)** **Type FGS 02.K/5**
- **switching output (break contact)** **Type FGS 02.K/6**

Description

Dew-point control sensors are mounted on cooling water pipes or on cooled surfaces and are used to monitor if the temperature drops below the dew-point.
They measure the relative humidity directly on the surface of the cooled part of the equipment and can, therefore, be used

- to influence cooling power
- to switch cooling systems on or off
- to signal the point at which the temperature drops below the dew-point.

This means that cooling ceilings, for example, can be operated with perfect results, even at critical climatic values, without condensation starting to form.

User instructions

The sensors are to be mounted in the place where condensation is most likely to form, on the polished metal pipe using cable binders or on a smooth surface which must be clear of grease and be dry using the **ZA 30-type mounting kit** (product info sheet no. F 5.1) which is available as an accessory.
Ensure that there is good thermal contact between the pipe or the surface and the humidity sensor.
The installation position is to be selected in such a way that a representative measurement of the air humidity will be given, i.e. the ambient air must be able to reach the measuring element within the casing without obstacles. The condensation controler should be exposed to the flow of air.
The sensors come ready-calibrated and, consequently, do not need to be adjusted on-site.

Please consult the ***application instructions for the sensing elements*** (product info sheet no. A 1) or check with the manufacturer for further information which you need to bear in mind when using humidity sensors with capacitive sensing elements.

Technical data

operating voltage ..... 24V AC/DC±10 %
power consumption ..... <8 mA
weight ..... approx. 75g
contacting ..... connecting terminals on the housing

Type FGO 2.K/5
measuring range (0...10 V) ..... 50...100%rh
accuracy (MR 50...95%rh , at 23°C) ..... ±2%rh
output signal ..... 0...10V
response time (at calm air) ..... < 20 s

Type FGS 02.K/5
break point (factory setting)
„off“ (contact „open“) ..... ≥96 ± 2%rh
„on“ ..... „off“-4%rh ±1%rh
output ..... floating contact
voltage ..... max. 48V
switching current ..... max. 0.5A
switching power ..... max. 10W

Type FGS 02.K/6
break point (factory setting)
„on“ (contact „closed) ..... ≥90 ± 2%rh
„off“ ..... „on“-4%rh ±1%rh
output ..... floating contact
voltage ..... max. 48V
switching current ..... max. 0.5A
switching power ..... max. 10W

Temperature application range FGO .... -20...+80°C
FGS ..... 0...+70°C

Type Survey

Type	FGSO2.K/5	FGSO2.K/6	FGO2.K/5
Order no.	42FGSO2.K/5	42FGSO2.K/6	45FGO2.K/5

ATTENTION! Sensors FG02.K/5 have no galvanical separation between output and operating voltage at the negative pole. Please pay attention to this fact when connecting an AC operating voltage

Assembly drawing

Mounted on: **...pipes**

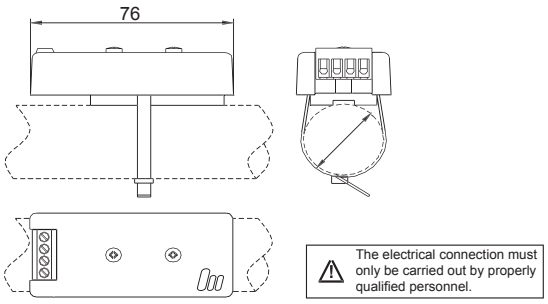

...smooth surfaces

(Mounting-Kit ZA30)

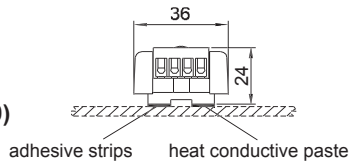

Pin assignment

Supply	Clamp	FGSO2.K/5	FGSO2.K/6	FGO2.K/5
24V AC/DC ± 10%	1	- (~)	- (~)	- (~)
	2	+ (~)	+ (~)	+ (~)
Output		contact	contact	analogue
	3	break contact	make contact	+ 0..10V
	4			- 0..10V
Break point		96%rh	90%rh	50...100%rh

This information is based on current knowledge and is intended to provide details of our products and their possible applications. It does not, therefore, act as a guarantee of specific properties of the products described or of their suitability for a particular application. It is our experience that the equipment may be used across a broad spectrum of applications under the most varied conditions and loads. We cannot appraise every individual case. Purchasers and/or users are responsible for checking the equipment for suitability for any particular application. Any existing industrial rights of protection must be observed. The perfect quality of our products is guaranteed under our General Conditions of Sale. Issue : January 2011 C413_e. Subject to modifications.